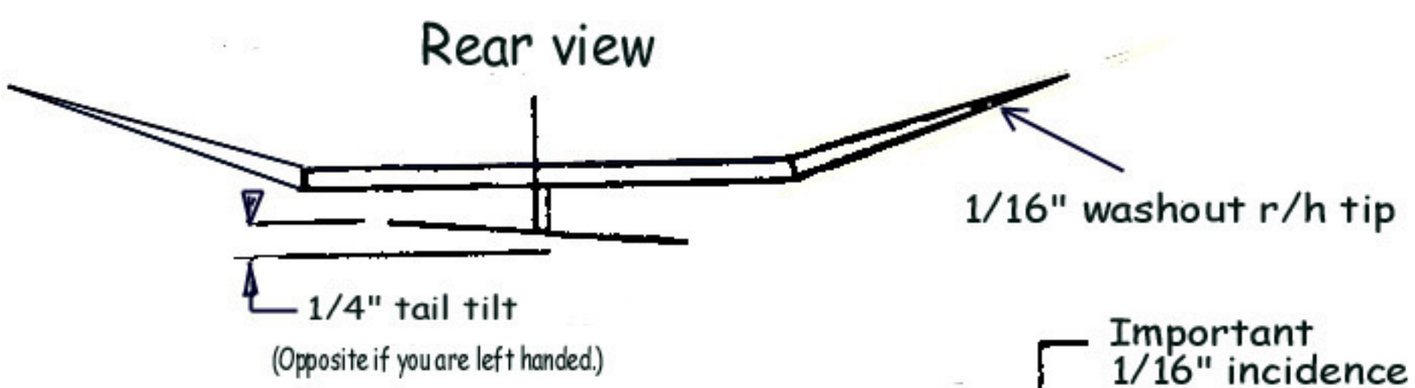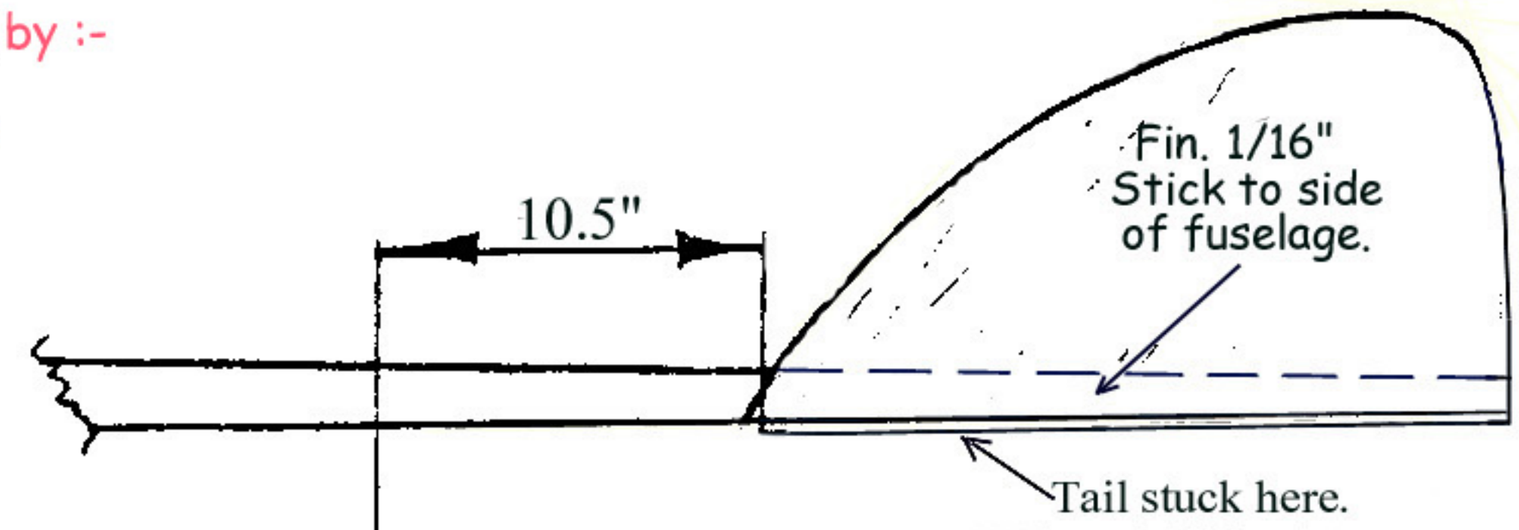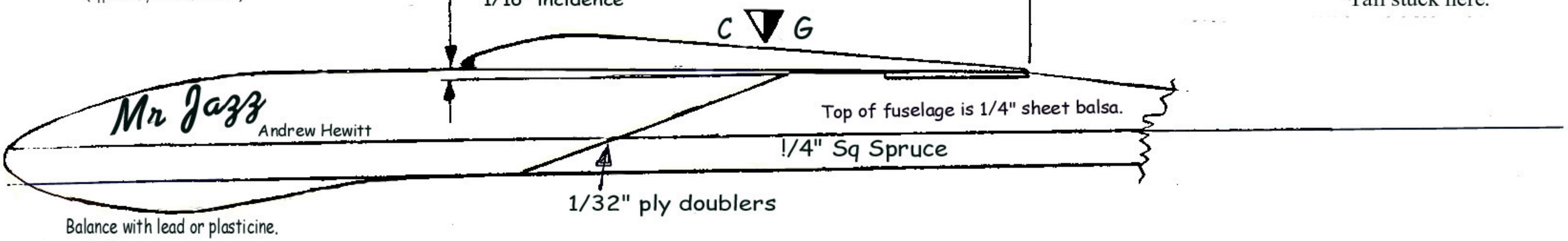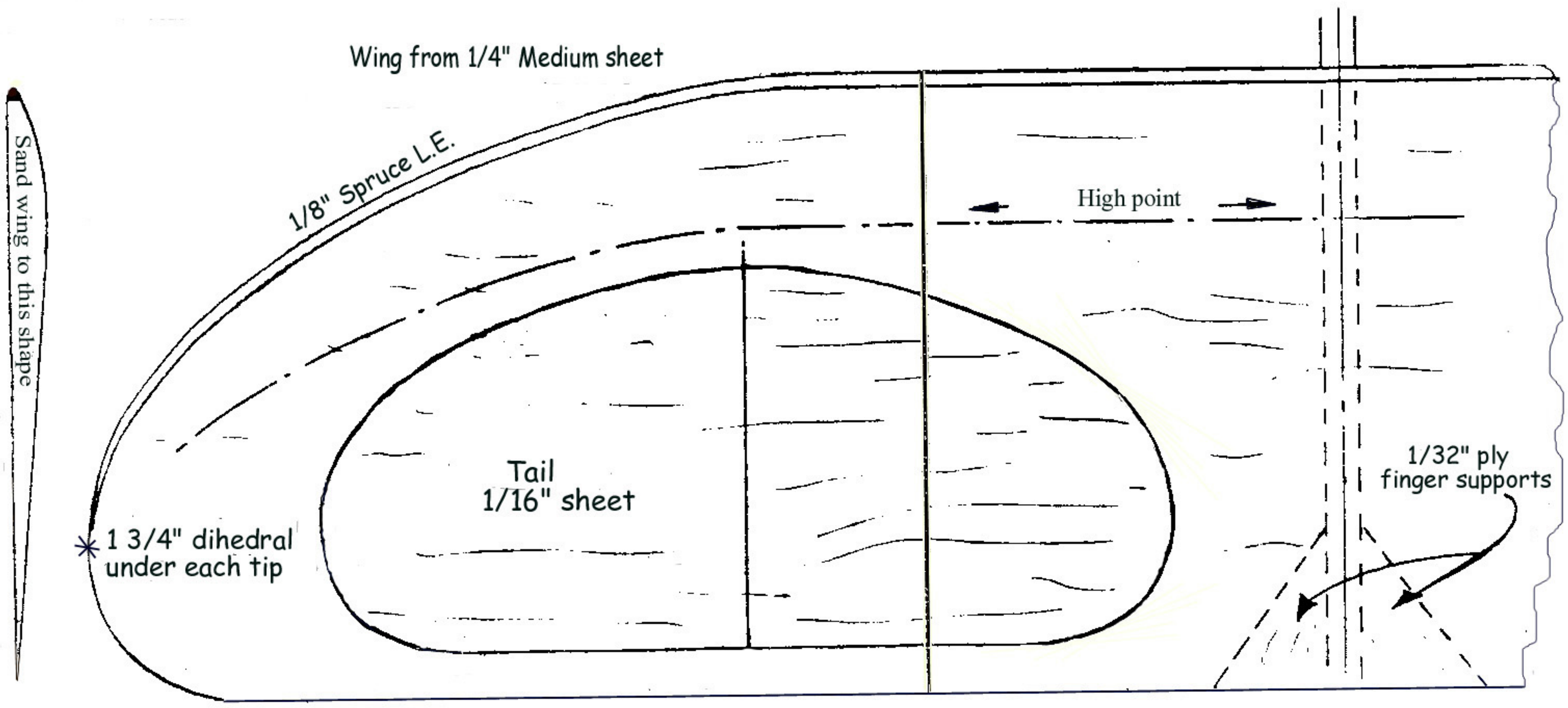This plan was supplied by :-
F4B Scale Magic
www.f4bscale.co.uk